InsightTouch
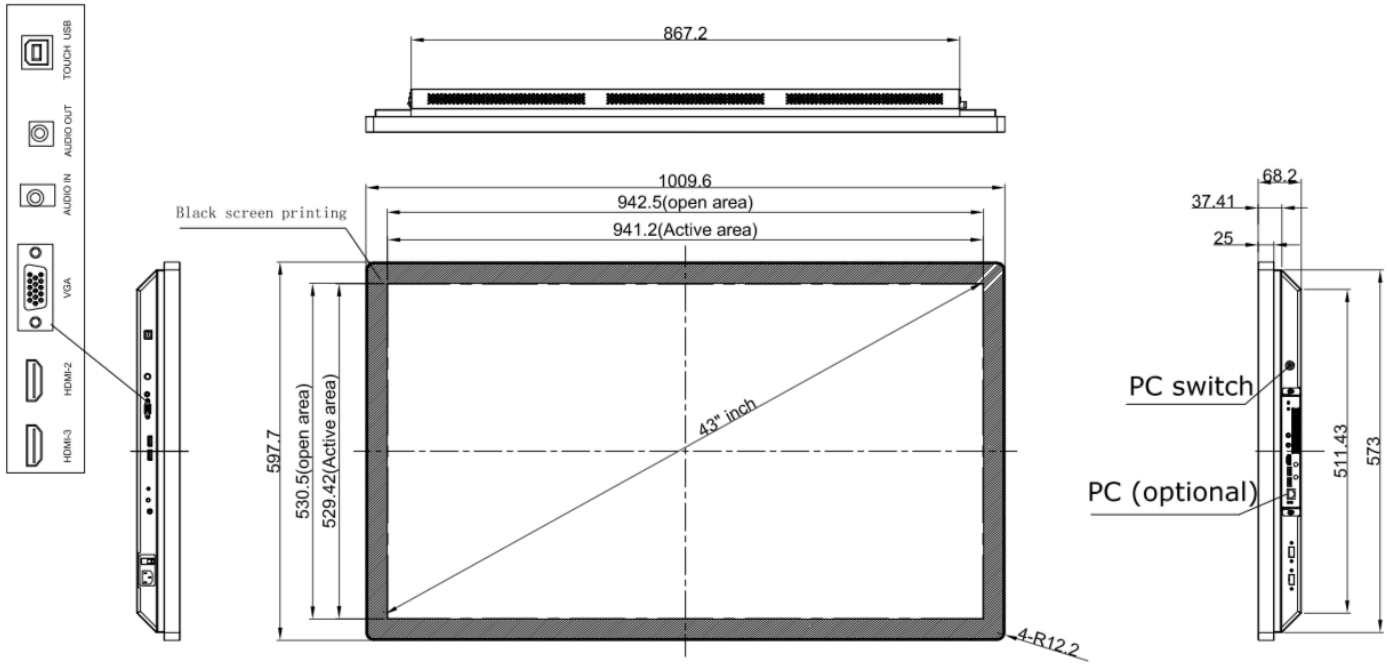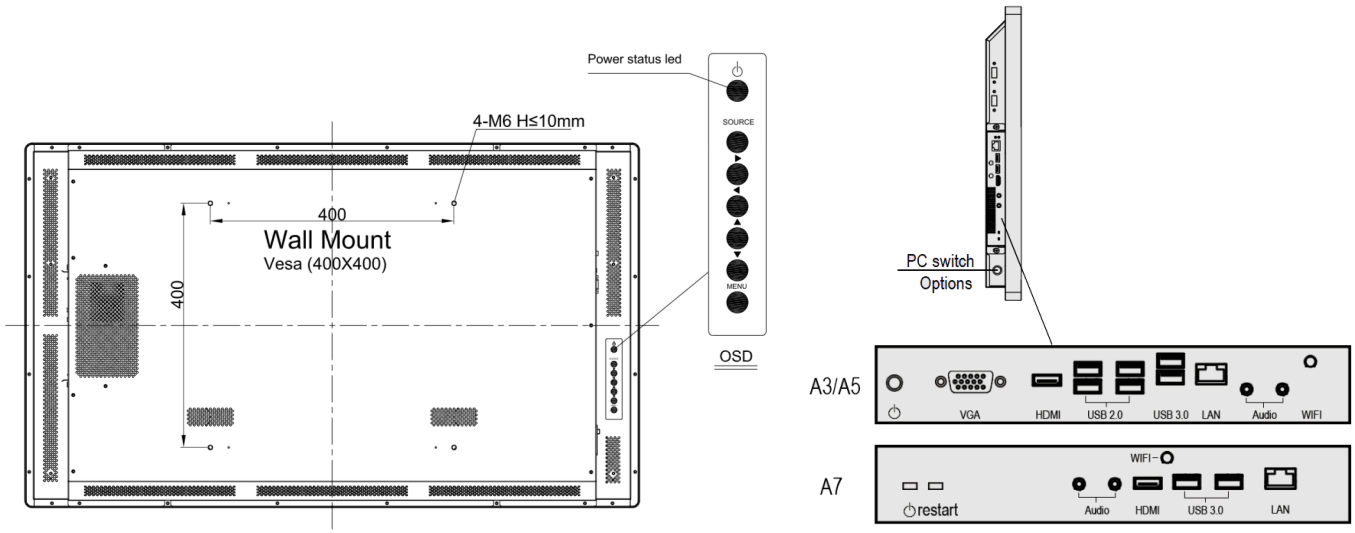
Mechanical Drawing: